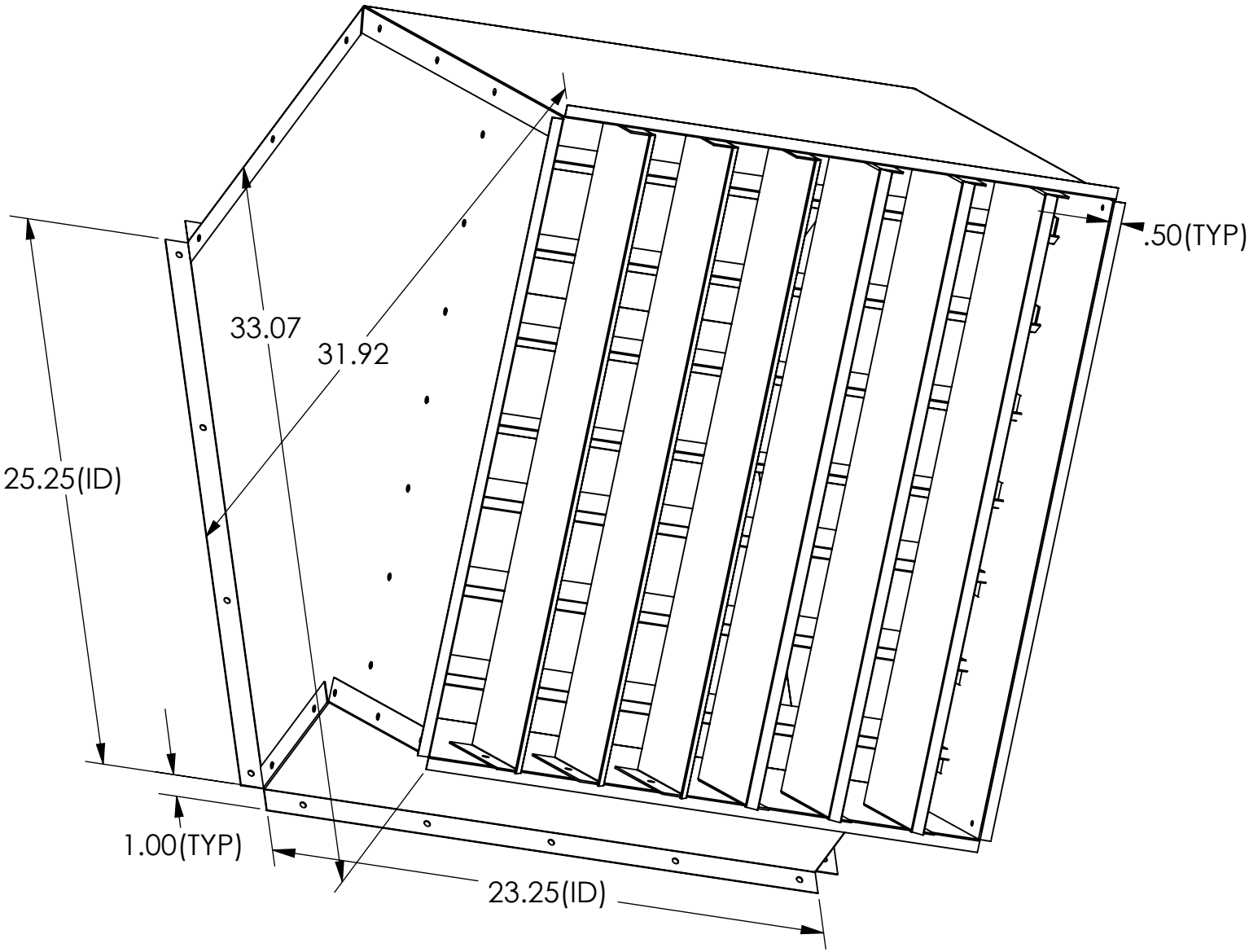

18 and 20 inch blower 45 degree

3/31/2015