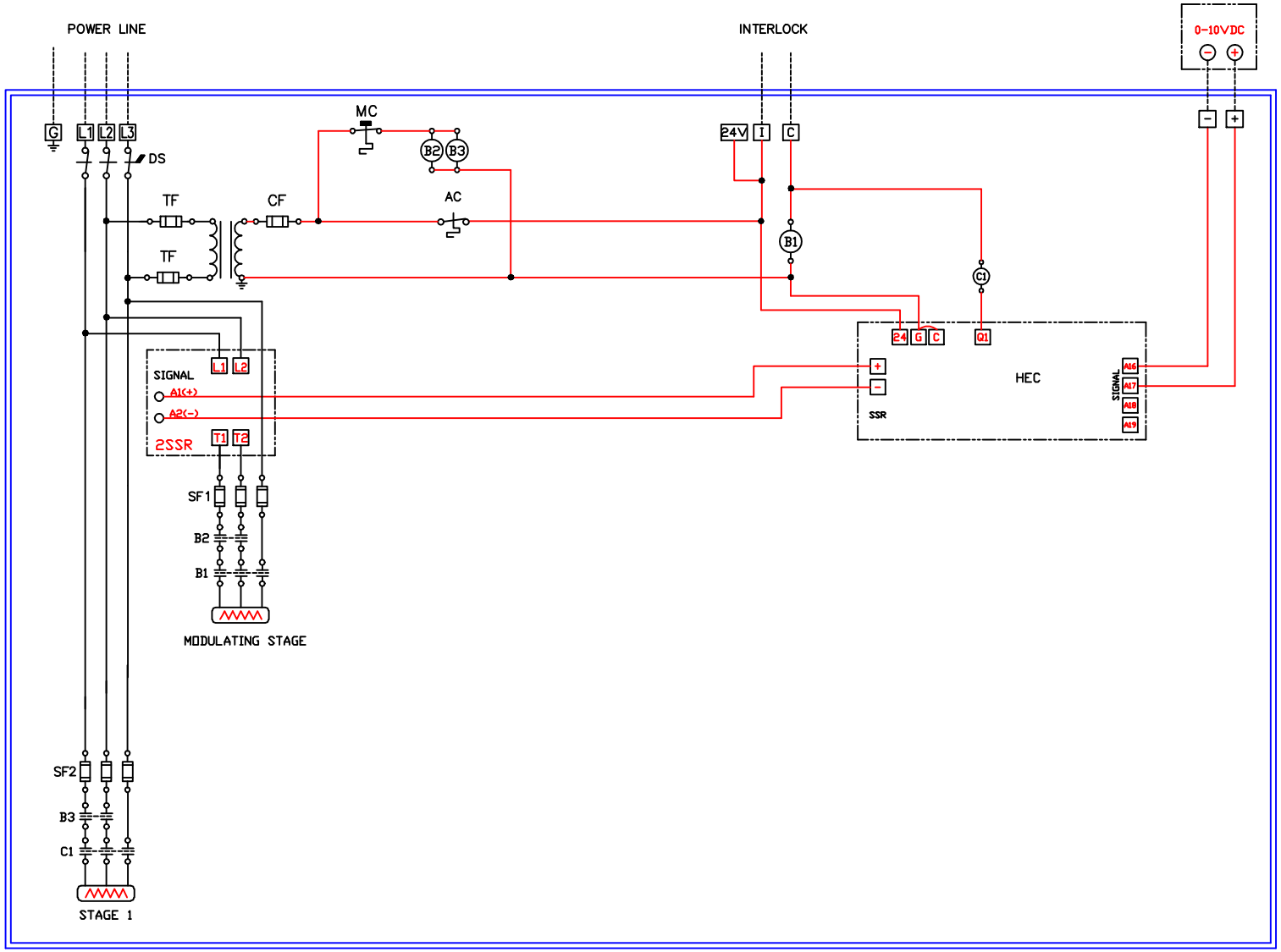

LEGEND

AC	AUTOMATIC CUTOUT
MC	MANUAL CUTOUT
DS	DISCONNECT SWITCH
B1	CONTACTOR COIL
	HEATING ELEMENT
TR	TRANSFORMER
	CONTACT NORMALY OPEN
	FUSE

CONTROL 24V: RED WIRE
POWER: BLACK WIRE

WARNING:
Disconnect all supplies before working on this duct heater

IMPORTANT:
Wire in according with electrical codes
Use copper wire for 90°C minimum

NOTE:
All wiring outside this frame are wiring by others

National Environmental Products Ltd 400 Lebeau, Montreal (QC) H4N 1R6 T: (514) 333-1433 F: 333-3163

PROPRIETARY INFORMATION : THIS DOCUMENT CONTAINS PROPRIETARY INFORMATION & IT'S PROPERTY OF N.E.P. LTD. THIS DOCUMENT AND THE INFORMATION IT CONTAINS SHALL NOT BE DUPLICATED OR USED IN WHOLE OR IN PART WITHOUT THE EXPRESS WRITTEN CONSENT OF N.E.P. LTD.

ELECTRICAL DRAWING

PART NUMBER: RTUEC-45KW6003
PROJECT NAME: RTUEC
CUSTOMER NAME: CAPTIVE AIRE, INC.